# SR REGULATOR REPAIR KIT

**MODEL:** **5271**

Revision: 0

**BULLETIN 5271**

## FIELD REPAIR INSTRUCTIONS FOR SR REGULATOR

PYRONICS, INC. DOES NOT RECOMMEND FIELD REPAIRS OF 5201-SR REGULATORS. IT IS EXTREMELY DIFFICULT TO GET THE SAME SETTING IN THE FIELD AS OPPOSED TO A FACTORY BUILT OR REBUILT UNIT. IN ADDITION, THERE IS A POSSIBILITY OF THE REGULATOR BEING ASSEMBLED IN AN IMPROPER MANNER WHICH COULD CREATE A HAZARDOUS CONDITION.

We realize, that on occasion, a situation develops that a field repair is the most practical solution.

The following instructions pertain to all sizes of standard SR Regulators manufactured by Pyronics. The minimum repairs will be considered initially, and then complete rebuild will be discussed. In the majority of cases the repair of a SR Regulator will require replacement of the main diaphragm. In this case, a partial disassembly is required.

1. Remove cap [item 1], measure position of adjusting screw [item 29] from top of spring housing [item 2] and record, then remove adjusting screw [item 29], spring guide [item 27], spring [item 26], and spring housing [item 2].

2. Disassemble regulator from spring housing through bottom pan [item 21]. Do not remove bottom nut [item 25].
   **CAUTION:** Hold the bottom nut [item 25] securely when removing the top nut [item 25], since it is important that the bottom nut is not moved.

3. Remove the bottom plug [item 16] from the regulator body [item 12] and inspect, as well as possible, the valve disc assembly and valve seat for dirt or damage. After inspection, push the valve firmly into the seat and block in this position. A piece of Styrofoam or similar material can be used to hold the valve disc in place.

   **NOTE:** If it is suspected that the valve disc or valve seat is damaged, a complete disassembly of the unit is necessary. Go to step 14.

4. Inspect the seal diaphragm [item 10] for damage; however, do not remove the seal diaphragm unless it is absolutely necessary. At this point, no further disassembly is required if you find that only the main diaphragm and/or pans have been damaged. Replace damaged parts. If seal diaphragm is damaged, go to step 14.

5. See Section “C”. Put gasket sealant on top of bottom nut [item 25] and around stem, then assemble lower diaphragm pan [item 21] with flange down, on valve stem [item 19], then main diaphragm [item 7], fiber washer [item 28] top pan [item 22] with flange up, steel washer [item 31] and then upper nut [item 25].

   **CAUTION:** Align holes in diaphragm with holes in bottom cover [item 20]. Diaphragm must be flat and free from wrinkles. Hold bottom nut [item 25] stationary and tighten top nut [item 25].

6. It is extremely important that there is no twist in the seal diaphragm. To check for this twist, hold top pan [item 22] and rotate main diaphragm assembly to the left until it becomes tight, mark position on bottom cover, then rotate to the right and mark position on bottom cover. The holes in the diaphragm should align with the cover holes midpoint between these two positions. If the position of the main diaphragm is not proper, loosen top nut [item 25], relocate main diaphragm and repeat procedure.

7. See Section “A”. Assemble gaskets [item 6] below and above main diaphragm [item 7], and then assemble bolts [item 5] up through cover and gaskets.

8. Assemble top cover [item 3] over bottom cover. Assemble lockwasher [item 17] and nuts [item 35] finger tight only.

9. Remove valve disc locking device. Move valve stem [item 19] back and forth to prevent tight spots in main diaphragm, then tighten nuts [item 35] and bolts [item 5] using “criss-crossing” tightening sequence.

**CAUTION: Operation of combustion equipment can be hazardous resulting in bodily injury or equipment damage. Each burner should be supervised by a combustion safeguard and only qualified personnel should install, make system adjustments and perform any required service.**

**ORDAN THERMAL PRODUCTS LTD**
**Combustion Equipment & Controls for Industry**
**21 Amber St # 9, Markham Ontario Canada L3R 4Z3**
**Tel: (905) 475-9292 Fax: (905) 475-3286**
**www.ordanthermal.com**

**NOTICE: PYRONICS practices a policy of continuous improvement in the design of its products. It reserves the right to change the specifcations at any time without prior notice.**

10. Assemble bottom plug [item 16] into valve body [item 12] using thread sealant.

11. Assemble spring housing [item 2] into top cover [item 3] using pipe sealant on threads.

12. Assemble spring [item 26], spring guide [item 27], and adjusting screw [item 29] into spring housing [item 2] and set position of adjusting nut to position recorded in step 1 above. Assemble cap [item 1] using thread sealant.

**The following additional instructions are for situations where the seal diaphragm has been damaged, and/or the valve assembly must be replaced.**

13. Remove cap [item 1], measure position of adjusting screw [item 29] from top of spring housing [item 2] and record, then remove adjusting screw [item 29], spring guide [item 27], spring [item 26] and spring housing [item 2].

14. Disassemble the regulator completely and inspect the valve seat in the body [item 12], and the flexible seat edge of the valve assembly [item 34]. The valve disc should be tightly screwed onto the valve stem with epoxy or gasket sealant.

15. Assemble valve disc assembly into valve body and lock into position with a piece of Styrofoam or similar material. By visual inspection be sure valve stem is concentric with top opening of valve body.

16. See Section "B". Apply gasket sealant on valve stem, in area where seal nut [item 25] will be assembled (see table on page 3 for seal nut setting opposite regulator size). Assemble bottom seal nut [item 25] in position, then put gasket sealant on top of nut and around the valve stem.

17. Assemble in following order (from bottom to top), steel washer [item 31], fiber washer [item 28], seal diaphragm [item 10] (align with impulse hole "X"), fiber washer [item 28], steel washer [item 31], and then top seal nut [item 25].

18. By holding washers with fingers, tighten top seal nut [item 25]. Check position of impulse hole in seal diaphragm with impulse hole in valve body. Realign if necessary by loosening valve disc holder and rotating valve stem. Relock valve disc.

19. Place a new seal gasket [item 9] under seal diaphragm and also on top, aligning holes with impulse hole in body.

20. Place bottom cover [item 20] on top of valve body, being sure that impulse hole "X" aligns with impulse hole in body. Assemble bolts [item 11] with lockwashers [item 8] using thread sealant; do not tighten.

    **CAUTION:** By observing through bolt holes, be sure seal diaphragm is clear of holes.

21. Allow valve disc assembly to move away (down) from valve seat the amount specified as "seal bag" in table on page 3 opposite regulator size. This operation will set an adequate amount of slack in the seal diaphragm.

22. **CAUTION:** Be sure stem of valve disc assembly is centered. Then tighten bolts [item 11] holding bottom cover to valve body.

23. Put thread sealant on valve stem, in area where bottom main diaphragm nut [item 25] will be assembled (see table on page 3 for main nut setting opposite regulator size). Assemble main diaphragm nut [item 25] in position, then put thread sealant on top of nut and around valve stem.

    **Now follow steps 5 through 12.**

# SR REGULATOR REPAIR KIT



## CROSS SECTION

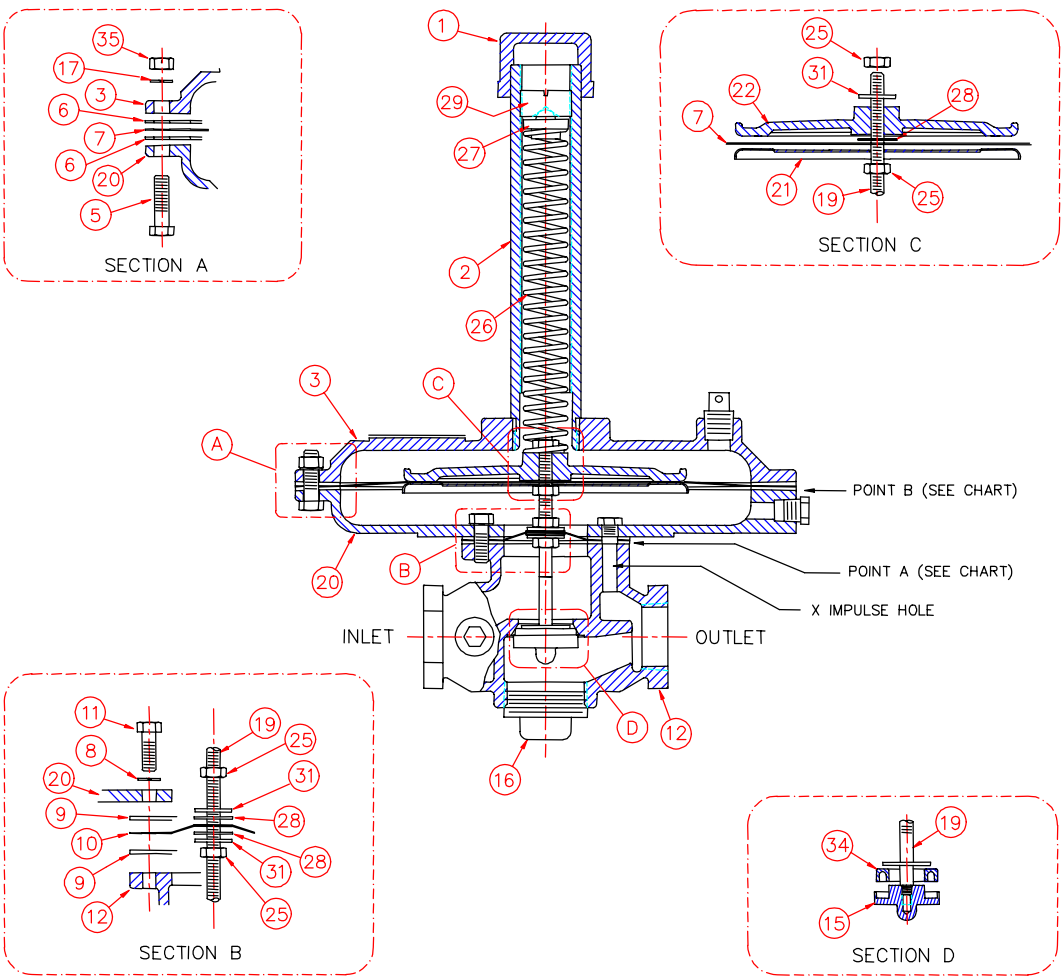


## REGULATOR SETTINGS

| SETTINGS FROM LEVEL - BOTTOM COVER (POINT 'A') AND BODY (POINT 'B') | | | | | |
|---|---|---|---|---|---|
| REGULATOR MODEL NO. | REPAIR KIT MODEL NO. | PIPE SIZE | SEAL BAG | SEAL NUT* | MAIN NUT* |
| 5201-SR- 6 | 5271-RK- 6 | 3/4" | 1/4" | +3/4 turn | Level |
| 5201-SR- 8 | 5271-RK- 8 | 1" | 3/8" | -1 turn | +1 turn |
| 5201-SR-12 | 5271-RK-12 | 1-1/2" | 5/8" | -3-1/2 turns | +1 turn |
| 5201-SR-16 | 5271-RK-16 | 2" | 5/8" | +3 turns | +3 turns |
| 5201-SR-20 | 5271-RK-20 | 2-1/2 | 5/8" | +1 turn | +2 turns |
| 5201-SR-24 | 5271-RK-24 | 3" | 1" | -2-1/3 turns | +2-1/2 turns |

* + turn up
– turn down

**CAUTION:** Operation of combustion equipment can be hazardous resulting in bodily injury or equipment damage. Each burner should be supervised by a combustion safeguard and only qualified personnel should install, make system adjustments and perform any required service.

ORDAN THERMAL PRODUCTS LTD
Combustion Equipment & Controls for Industry
21 Amber St # 9, Markham Ontario Canada L3R 4Z3
Tel: (905) 475-9292 Fax: (905) 475-3286
www.ordanthermal.com

**NOTICE:** PYRONICS practices a policy of continuous improvement in the design of its products. It reserves the right to change the specifcations at any time without prior notice.